CERTIFICATE
OF EMC COMPLIANCE

According to Directive 2014/30/EU
Ref. No.: 20251211002E

Product: Standing mailbox

Applicant: Suzhou Hongmao Import & Export Trade Co.,Ltd

Address: Floor 2, Building A, No.1899, Songjia Road , Wuzhong District, Suzhou City

Model: HPB******* (*=0-9,A-Z,-,/, blank, indicates only the sales region, does not affect the electromagnetic compatibility performance)

Rating: 3.7VDC(Battery powered)

The test sample of product has been passed, the test according to requirements of the following standards:

Standard(s):	Test report(s) No.:
EN IEC 61000-6-3:2021 EN IEC 61000-6-1:2019 EN IEC 61000-3-2-2019+A1-2021 EN 61000-3-3-2013+A1-2019	SZQLAB-20251211002E

Based on the voluntary assessment of the product sample and technical file, we confirm that the above-mentioned product meets the requirements of the EC directive.
The CE mark as show below can be used, under the responsibility of the manufacturer or the importer, after completion of an EC declaration of conformity and compliance with all relevant EC directives.

Kelvin Zhang

General Manager

Approved by/Date: December 19, 2025

Suzhou SZQ Testing Co., Ltd. CE APPROVED

Suzhou SZQ Testing Co., Ltd.
Building 1, No.3-2, Dongwu South Road, Wu Zhong Economic Development Zone, Suzhou
T: +86 512-6879 6618 szqlab@szqlab.com www.szqlab.com

EMC TEST REPORT

Reference No.:	SZQLAB-20251211002E
Product:	Standing mailbox
Model No.:	HPB*******（*=0-9,A-Z,-,/, blank, indicates only the sales region, does not affect the electromagnetic comp atibility performance）
Applicant:	Suzhou Hongmao Import & Export Trade Co.,Ltd
Address:	Floor 2, Building A, No.1899, Songjia Road , Wuzhong District, Suzhou City
Issued by:	Suzhou SZQ Testing Co., Ltd.
Lab location:	Building 1, No.3-2, Dongwu South Road, Wuzhong Economic Development Zone, Suzhou
Tel:	86 512 68796618

This test report consists of 35 pages in total. It may be duplicated completely for legal use with the approval of the applicant. It should not be reproduced except in full, without the written approval of our laboratory. The client should not use it to claim product endorsement by SZQLAB. The test results in the report only apply to the tested sample. The test report shall be invalid without all the signatures of testing engineers, reviewer and approver. Any objections must be raised to SZQLAB within 15 days since the date when the report is received. It will not be taken into consideration beyond this limit.

Revision History

Report No	Version	Date	Description
SZQLAB-20251211002E	1	2025.12.19	Initial Issue

Table of Contents

1 Test Report Certification 3
2 General Information 4
2.1 Description of EUT 4
2.2 Details of Support Equipment(s) 4
3 Test Methodology 5
3.1 Objective 5
3.2 Description of Test Modes 5
3.3 EUT System Operation 5
3.4 Setup Of Equipment Under Test 5
3.5 Test Standards and Results 6
3.6 Measurement uncertainty 7
3.7 List of Equipments Used 8
4 Emission Test 9
4.1 Conducted Disturbance at Mains Terminals 9
4.2 Conducted Disturbance at Telecommunication ports 11
4.3 Radiated Disturbance Measurement 13
4.4 Harmonic Current Measurement 18
4.5 Voltage Fluctuation and Flick Measurement 21
5 Immunity Test 22
5.1 EUT Setup and Operating Conditions 22
5.2 Performance Criteria 22
5.3 Electrostatic Discharge Immunity Test 22
5.4 Radiated, Radio Frequency Electromagnetic Field Immunity Test 25
5.5 Electrical Fast Transient/Burst Immunity Test 27
5.6 Surge Immunity Test 28
5.7 Immunity to Conducted Disturbances Induced by RF Fields 29

5.8 Power Frequency Magnetic Field Immunity Test 30

5.9 Voltage Dips and Short Interruptions Immunity Test 32

ANNEX I - EUT PHOTOS 34

1 Test Report Certification

Product:	Standing mailbox
Model No.:	HPB*******（*=0-9,A-Z,-,/, blank, indicates only the sales region, does not affect the electromagnetic compatibility performance）
Applicant:	Suzhou Hongmao Import & Export Trade Co.,Ltd
Applicant Address:	Floor 2, Building A, No.1899, Songjia Road , Wuzhong District, Suzhou City
Manufacturer:	Suzhou Hongmao Import & Export Trade Co.,Ltd
Manufacturer Address:	Floor 2, Building A, No.1899, Songjia Road , Wuzhong District, Suzhou City
Factory:	Suzhou Hongmao Import & Export Trade Co.,Ltd
Factory Address:	Floor 2, Building A, No.1899, Songjia Road , Wuzhong District, Suzhou City
Test Standards:	EN IEC 61000-6-3:2021 EN IEC 61000-6-1:2019 EN IEC 61000-3-2-2019+A1-2021 EN 61000-3-3-2013+A1-2019
Date of Test:	2025-12-16
Test Result:	**PASS**

We, Suzhou SZQ Testing Co., Ltd., hereby certify that the Equipment Under Test (EUT) described above has been tested in our facility. The test record, data evaluation and EUT configuration represented herein are true and accurate accounts of measurements of the sample's EMC characteristics under the conditions herein specified.

Tested by: Ang Zhao, Date: *2025.12.19*

Ang Zhao

Checked by: Shanzuo Gu, Date: *2025.12.19*

Shanzuo Gu

2 General Information

2.1 Description of EUT

Product:	Standing mailbox
Model No.:	HPB932L-01
Brand Name:	—
Serial No.:	—
Rated power supply:	3.7VDC(Battery powered)
I/O Ports:	—
Accessories:	—

Note:

(1). The test samples are preproduction. For more detailed features description about the EUT, please refer to User's Manual.

(2). The maximum frequency generated or used inside the EUT, or the frequency at which the EUT operates or is tuned, is:<108 MHz.

2.2 Details of Support Equipment(s)

Description	Manufacturer	Model No.	Connection Port	Working State
/	/	/	/	/

3 Test Methodology

3.1 Objective

Perform ElectroMagnetic Interference (EMI) and ElectroMagnetic Susceptibility (EMS) tests for CE Marking.

3.2 Description of Test Modes

To investigate the maximum EMI emission characteristics generates from EUT, the test system was pre-scanning tested base on the consideration of following EUT operation mode or test configuration mode which possible have effect on EMI emission level. Each of these EUT operation mode(s) or test configuration mode(s) mentioned above was evaluated respectively.

Pretest Mode	Description
Mode 1	Normal Operation With HPB932L-01

Final Mode	Description
Mode 1	Normal Operation With HPB932L-01

3.3 EUT System Operation

1. According to the erection of figure for site erection.
2. Turn on the power of all equipments,Keep EUT running in its normal working state,and record test results.
3. Start testing.

Note: Test program is self-repeating throughout the test.

3.4 Setup Of Equipment Under Test

The EUT has been tested as an independent unit together with other necessary accessories or support units. The following support units or accessories were used to form a representative test configuration during the tests.

3.5 Test Standards and Results

The EUT has been tested according to the following specifications:

EMISSION (EN IEC 61000-6-3:2021)		
Test Type	**Standard**	**Result**
Mains terminal disturbance voltage	EN IEC 61000-6-3:2021	N/A
Conducted Common mode Disturbance at Telecommunication Ports	EN IEC 61000-6-3:2021	N/A
Radiated Disturbance (30MHz-1GHz)	EN IEC 61000-6-3:2021	PASS
Radiated Disturbance (1GHz-6GHz)	EN IEC 61000-6-3:2021	N/A
Harmonic current emissions	EN IEC 61000-3-2-2019+A1-2021	N/A
Voltage fluctuation & flicker	EN 61000-3-3-2013+A1-2019	N/A
IMMUNITY (EN IEC 61000-6-1:2019)		
Test Type	**Basic Standard**	**Result**
Electrostatic discharge immunity	IEC 61000-4-2	PASS
Radiated, radio frequency electromagnetic field immunity	IEC 61000-4-3	PASS
Electrical fast transient/burst immunity	IEC 61000-4-4	N/A
Surge immunity	IEC 61000-4-5	N/A
Immunity to conducted disturbances induced by RF fields	IEC 61000-4-6	N/A
Power frequency magnetic field immunity	IEC 61000-4-8	PASS
Voltage dips and short interruptions immunity	IEC 61000-4-11	N/A

Note: The latest versions of basic standards are applied.

3.6 Measurement uncertainty

Where relevant, the following measurement uncertainty levels have been estimated for tests performed on the EUT as specified in CISPR 16-4-2:

Measurement	Frequency	Uncertainty
Conducted Emissions (Power Port)	0.15MHz~30MHz	±2.8dB
Conducted Emissions (Telecom Port)	0.15MHz~30MHz	±3.3dB

Measurement	Frequency	Uncertainty
Radiated Emissions (below 1GHz)	30MHz ~ 1000MHz	±4.7dB
Radiated Emissions (above 1GHz)	1000MHz ~6000MHz	±4.2dB

(1) This uncertainty represents an expanded uncertainty expressed at approximately the 95% confidence level using a coverage factor of k=2.

(2) Consistent with industry standard (e.g. CISPR 32: 2019, clause 11, Measurement Uncertainty) determining compliance with the limits shall be base on the results of the compliance measurement. Consequently the measure emissions being less than the maximum allowed emission result in this be a compliant test or passing test.

(3) The acceptable measurement uncertainty value without requiring revision of the compliance statement is base on conducted and Radiated Emissions being less than UCISPR which is 3.6dB and 5.2dB respectively. CCS values (called ULab in CISPR 16-4-2) is less than UCISPR as shown in the table above. Therefore, MU need not be considered for compliance.

3.7 List of Equipments Used

Name of Instrumentation	Model	Serial Number	Calibration Due Date
EMI Test Receiver	ESCI	RU-001E	2026.06.20
LISN	ESH 3-z5	EV-202E	2026.06.20
PULSE LINITER	ESH 3-z2	RZ-032E	2026.02.28
ISN	FCC-TLISN T2-02	RZ-001E	2026.06.20
ISN	FCC-TLISN T4-02	RZ-002E	2026.06.20
ISN	FCC-TLISN T8-02	RZ-003E	2026.06.20
TRILOG Broadband Antenna	VULB9163	RG-001E	2026.07.04
CDNE Coupled Network	KH3663E	RZ-019E	2026.06.20
Power absorbing pliers	EM5018	EM-001E	2026.07.10
Spectrum Analyzer	N9000A	RU-002E	2026.12.12
Pre-Amplifier	LNA0640	RZ-020E	2026.02.28
Broad-Band Horn Antenna	3115	RG-003E	2025.12.29
Loop Antenna	ZN30401	RG-002E	2026.06.20
EMC HARMONICS & FLICKER TEST SYSTEMS	ECTS2-140M	RZ-018E	2026.06.20
Electrostatic discharge generator	EDS20H	EV-203E	2026.03.02
Signal Generator	SMB100A	EV-003E	2026.12.12
Power Sensor	U2001A	RZ-030E	2026.06.20
Power Sensor	U2001A	RZ-031E	2026.06.20
Power Amplifier	HAP_80M01G-250W	RZ-011E	2026.06.21
Power Amplifier	HAP_01G06G-75W	RZ-012E	2026.06.21
RF Switch	PFSU_DC18G-4C	RZ-013E	2026.06.20
Stacked logarithmic periodic antenna	STLP 9129 PLUS	RZ-014E	/
Combined immunity tester	CCS 600	RZ-004E	2026.06.20
Coupling and Decoupling Networks	CDN 405M40	RZ-008E	2026.06.20
Capacitive coupling clamp	CCC 100	RZ-006E	2026.06.20
Power fail simulator	PFS 2216SD	RZ-007E	2026.06.20
RF conducted immunity testing system	CST 1075	RZ-005E	2026.06.21
Coupled decoupling network	CDN M2M3	RZ-024E	2026.06.21
EM Clamp	EM CL100	RZ-021E	2026.06.21
50ohm Termination	2W Dummy load	RZ-022E	2026.07.02
50ohm Termination	TF2-1G-A	RZ-023E	2026.06.20
AC/DC variable frequency magnetic field with coil	MFS 300AP TYX130	RZ-010E	2026.06.20
pulsed magnetic field simulator	PMC 1200 TCXS111	RZ-009E	2026.06.20
CYCLE SAG SIMULATOR	DRP6101lTx	RZ-033E	2026.07.30
DC power supply	ADC200-30G	EV-220	2026.06.20
DC power supply	ADC200-30G	EV-221	2026.06.20
DC power supply	ADC200-30G	EV-222	2026.12.12
Surge Generator	NSX-560CT	EV-204E	2026.02.28
Unshielded Symmetric Coupling/Decoupling Network	CDN-5802C	EV-205E	2026.02.28
3m semi-anechoic chamber	SAC-3	RD-001E	2028.07.05
Software	EZ-EMC	NB-03A1-01	/
Software	EMC-S	V2.1.2.9	/
Software	EMC-S	V1.4.0.54	/
Software	APS HFa16	V1.0.42.0	/
LISN	LNC-S16	RZ-035E	2026.09.08

Note: Equipments above have been calibrated and are in the period of validation.

4 Emission Test

4.1 Conducted Disturbance at Mains Terminals

4.1.1 Limits

Frequency range (MHz)	Limits (dBμV)	
	Quasi-peak	Average
0.15 - 0.50	66 to 56	56 to 46
0.50 - 5	56	46
5 - 30	60	50

Notes:

(1) The lower limit shall apply at the transition frequencies.

(2) The limit decreases linearly with the logarithm of the frequency in the range 50 kHz to 150 kHz and 150 kHz to 0.5 MHz.

(3) If the quasi-peak value is lower than Average Limits, it is no necessary to conduct the average measurement.

4.1.2 Test Procedure

a. The EUT was placed 0.4 meters from the conducting wall of shielded room with EUT being connected to the power mains through a line impedance stabilization network (LISN). The LISN provide 50Ω/50μH of coupling impedance for the measuring instrument.

b. Both lines of the power mains connected to the EUT were checked for maximum conducted interference.

c. The frequency range from 150 kHz to 30 MHz was searched. Emission levels over 10dB under the prescribed limits are not reported.

4.1.3 Test Setup

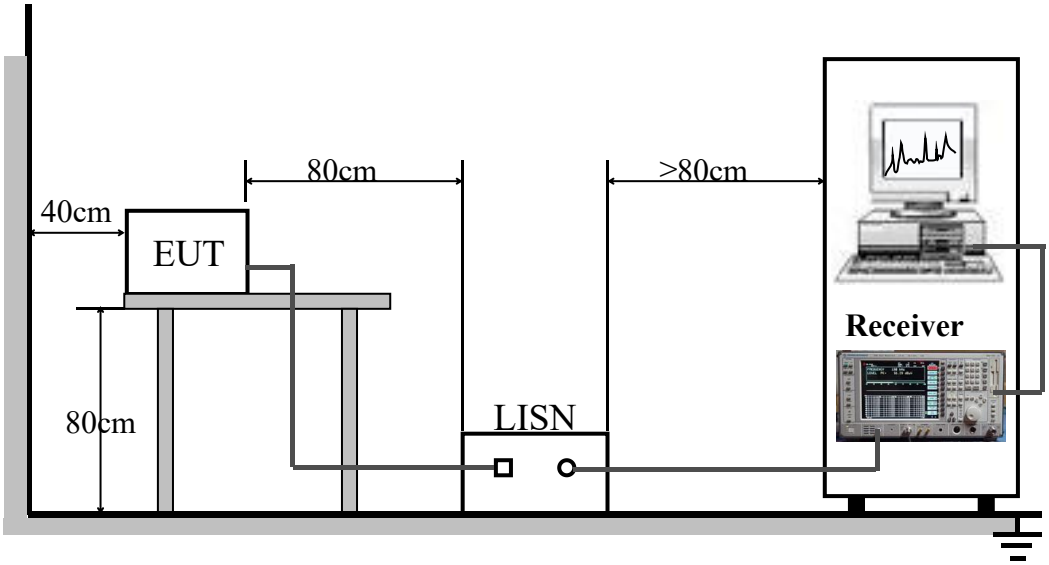

For the actual test configuration, please refer to the related item - Photographs of the Test Configuration.

4.1.4 Test Location

Shield Room：Located at C2.

4.1.5 Test Result

The EUT is not suitable for the test.

4.2 Conducted Disturbance at Telecommunication ports

4.2.1 Limits

Frequency range (MHz)	Limits (dBμV)	
	Quasi-peak	Average
0.15 - 0.50	84 to 74	74 to 64
0.50 - 30	74	64

NOTE:

(1). The lower limit shall apply at the transition frequencies.
(2). The limit decreases linearly with the logarithm of the frequency in the range 0.15MHz to 0.50MHz.
(3). If the quasi-peak value is lower than Average Limits, it is no necessary to conduct the average measurement.

4.2.2 TEST Procedure

The following test modes was scanned during the preliminary test:
After the preliminary scan, we found the following test mode producing the highest emission level and test data of the worst case was recorded..

4.2.3 Test Setup

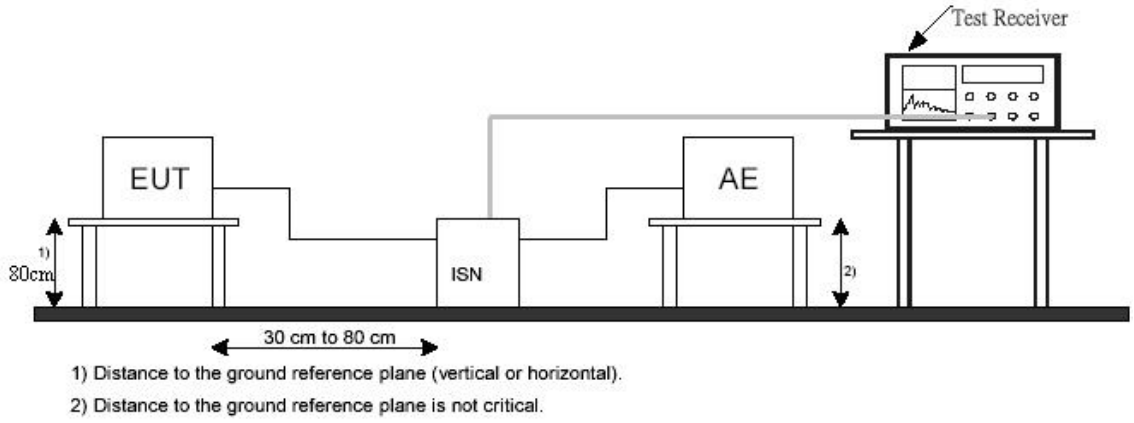

For the actual test configuration, please refer to the related item – Photographs of the Test Configuration.

4.2.4 Test Location

Shield Room：Located at C2.

4.2.5 Test Result

The EUT is not suitable for the test.

4.3 Radiated Disturbance Measurement

4.3.1 Limits of Radiated Disturbance (30MHz~1000MHz)

Frequency range (MHz)	Quasi peak limits(dBμV/m)
	At 3m measurement distance
30 - 230	40
230 - 1000	47

Notes:

(1) The lower limit shall apply at the transition frequency.

(2) Additional provisions may be required for cases where interference occurs.

4.3.2 Limits of Radiated Disturbance (Above 1GHz)

Frequency range (GHz)	Limits(dBμV/m)	
	Average	peak
1～3	50	70
3～6	54	74

4.3.3 Test Procedure

a. The EUT was placed on the top of an insulating table 0.8 meters above the ground at a semi-anechoic chamber. The table was rotated 360 degrees to determine the position of the highest radiation.

b. The Boundary of EUT(imaginary circular periphery) was set 3 meters away from the interference-receiving antenna, which was mounted on the top of a variable-height antenna tower.

c. The antenna is a broadband antenna, and its height is varied from 1 to 4 meter above the ground to determine the maximum value of the field strength. Both horizontal and vertical polarizations of the antenna are set to make the measurement.

d. For each suspected emission, the EUT was arranged to its worst case and then the antenna was tuned to the heights from 1 to 4 meters and the ratable table was turned from 0 degrees to 360 degrees to find the maximum reading.

e. The test-receiver system was set to Peak Detector Function and Specified Bandwidth with Maximum Hold Mode. If the emission level of the EUT in peak mode was 10dB lower than the limit specified, then testing could be stopped and the peak values of the EUT would be reported. Otherwise the emission that did not have 10dB margin would be retested one by one using the quasi-peak method.

4.4.4 Test Setup

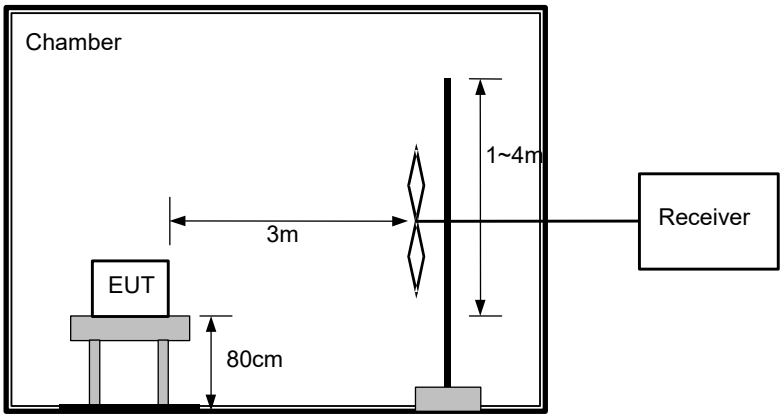

For the actual test configuration, please refer to the related item – Photographs of the Test Configuration.

4.3.5 Test Location

Semi-anechoic chamber：SAC3.

4.3.6 Test Result (30MHz~1000MHz)

30MHz~1000MHz Radiated disturbance(Horizontal)

Test Curve(Mode 1)

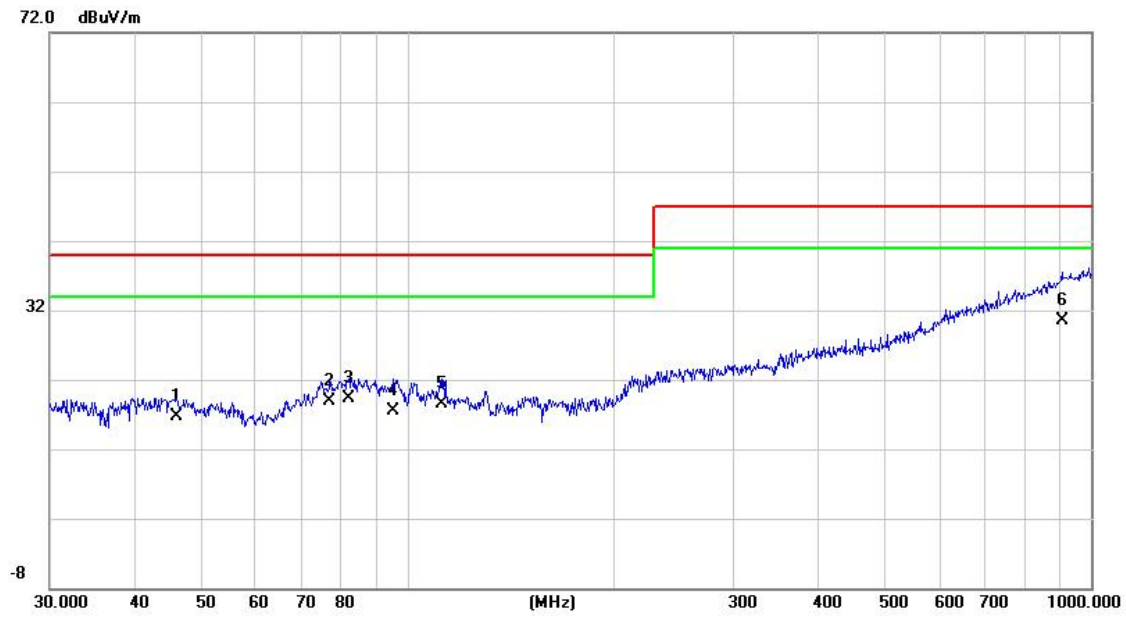

Test Data

Freq. (MHz)	Height of Antenna (cm)	Angle of Turntable (°)	Limits (QP) (dBµV/m)	Measurement Value (QP) (dBµV/m)	Margin (dB)
46.0162	200	90	40.00	16.77	-23.23
77.0502	200	284	40.00	18.91	-21.09
82.0704	200	360	40.00	19.21	-20.79
95.4270	200	11	40.00	17.52	-22.48
112.1303	200	25	40.00	18.44	-21.56
906.4823	200	1	47.00	30.46	-16.54

30MHz~1000MHz Radiated disturbance(Vertical)

Test Curve(Mode 1)

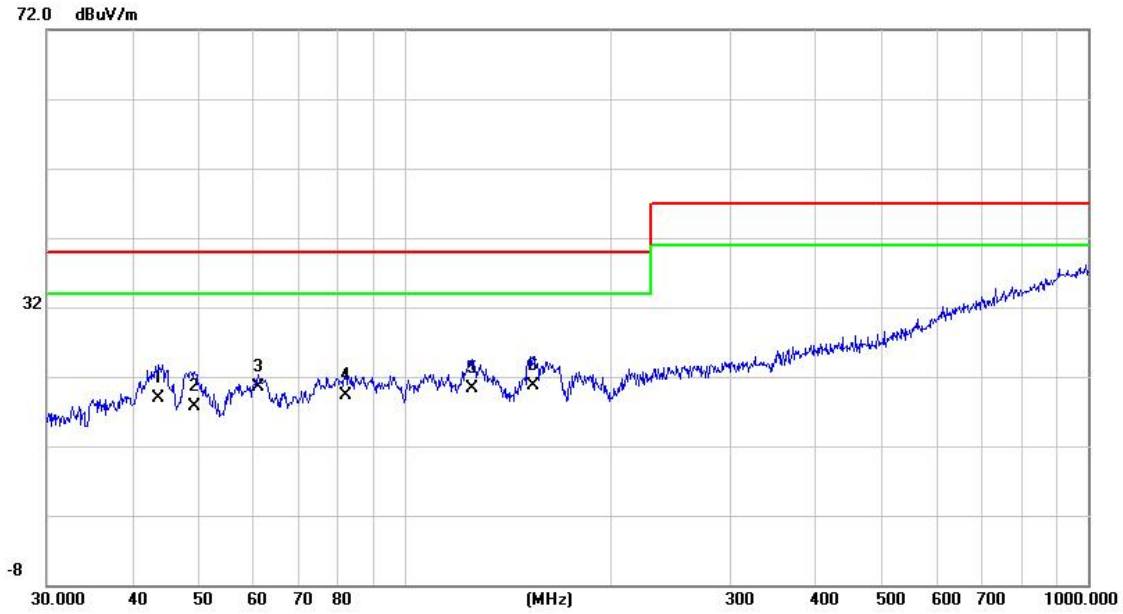

Test Data

Freq. (MHz)	Height of Antenna (cm)	Angle of Turntable (°)	Limits(QP) (dBµV/m)	Measurement Value (QP) (dBµV/m)	Margin (dB)
43.6584	100	1	40.00	18.99	-21.01
49.3594	100	54	40.00	17.61	-22.39
61.1315	100	163	40.00	20.55	-19.45
82.0704	100	77	40.00	19.32	-20.68
125.4457	100	4	40.00	20.37	-19.63
154.2785	100	183	40.00	20.67	-19.33

4.3.7 Test Result (Above 1GHz)

The EUT is not suitable for the test.

4.4 Harmonic Current Measurement

4.4.1 Limits of Harmonic Current

Limits for Class A Equipment			
Harmonics Order n	**Max. permissible harmonic current (A)**	**Harmonics Order n**	**Max. permissible harmonic current (A)**
Odd harmonics		**Even harmonics**	
3	2.30	2	1.08
5	1.14	4	0.43
7	0.77	6	0.30
9	0.40	8≤n≤40	0.23×8/h
11	0.33		
13	0.21		
15≤n≤39	0.15×15/h		

Limits for Class B Equipment
For Class B equipment, the harmonics of the input current shall not exceed the values given in Table that is the limit of Class A multiplied by a factor of 1,5

Limits for Class C Equipment	
Harmonics Order n	**Maximum permissible harmonic current expressed as a percentage of the input current at the fundamental frequency %**
2	2
3	27*
5	10
7	7
9	5
11<n<39 (odd harmonics only)	3
*The limit is determined based on the assumption of modern lighting technologies having power factors of 0,90 or higher	

Limits for Class D Equipment		
Harmonics Order n	**Maximum permissible harmonic current per watt mA/W**	**Maximum permissible harmonic current A**
3	3.4	2.30
5	1.9	1.14
7	1.0	0.77
9	0.5	0.40
11	0.35	0.33
11 < n < 39 (odd harmonics only)	3.85/h	See limit of Class A

Note:

(1). Class A and Class D are classified according to item 7.4.3.

(2). According to section 7 of EN 61000-3-2, the above limits for all equipment except for lighting equipment having an active input power > 5 W and no limits apply for equipment with an active input power up to and including 75 W.

4.4.2 Test Procedure

a. The EUT was placed on the top of a wooden table 0.8 meters above the ground and operated to produce the maximum harmonic components under normal operating conditions for each successive harmonic component in turn.

b. The EUT is classified as follows:

Class A: Balanced three-phase equipment, household appliances, Excluding those specified as belonging to Class B, C or D, Vacuum cleaners, High pressure cleaners, Tools, Excluding portable tools, Independent phase control dimmers, Audio equipment, Professional luminaires for stage lighting and studios.

Class B: Portable tools, Arc welding equipment which is not professional equipment.

Class C: Lighting equipment.

Class D: Equipment having a specified power less than or equal to 600 W according to 6.3.2, of the following types: Personal computers and personal computer monitors, Television receivers, Refrigerators and freezers having one or more variable-speed drives to control compressor motor(s).

c. The correspondent test program of test instrument to measure the current harmonics emanated from EUT is chosen. The measure time shall be not less than the necessary for the EUT to be exercised.

4.4.3 Test Setup

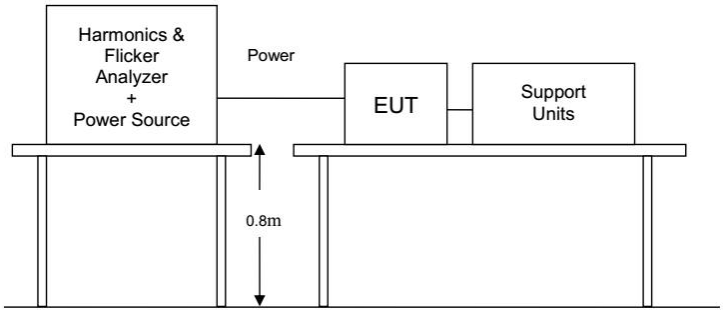

4.4.4 Test Location

Testing room: Located at C2.

4.4.5 Test Result

The EUT is not suitable for the test.

4.5 Voltage Fluctuation and Flick Measurement

4.5.1 Limits of Voltage Fluctuation and Flick

Test Item	Limit	Note
P_{st}	1.0	P_{st} means Short-term flicker indicator
P_{lt}	0.65	P_{lt} means long-term flicker indicator
T_{dt}	500ms	T_{dt} means maximum time that d_t exceeds 3%
d_{max}(%)	4%	d_{max} means maximum relative voltage change.
D_c(%)	3.3%	d_c means relative steady-state voltage change.

4.5.2 Test Procedure

a. The EUT was placed on the top of a wooden table 0.8 meters above the ground and operated to produce the most unfavorable sequence of voltage changes under normal conditions.

b. During the flick measurement, the measure time shall include that part of whole operation changes. The observation period for short-term flicker indicator is 10 minutes and the observation period for long-term flicker indicator is 2 hours.

4.5.3 Test Setup

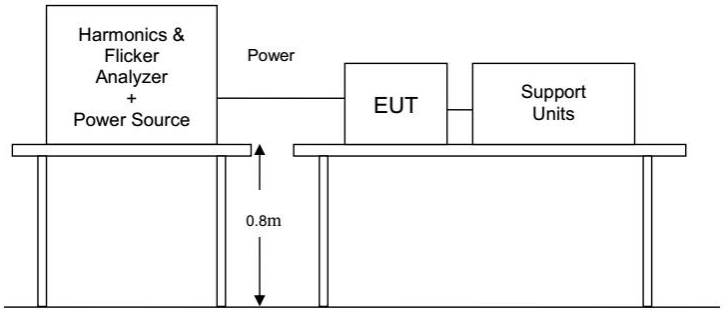

4.5.4 Test Location

Testing room: Located at C2.

4.5.5 Test Result

The EUT is not suitable for the test.

5 Immunity Test

5.1 EUT Setup and Operating Conditions

Same as 3.1

5.2 Performance Criteria

Criterion A	The apparatus shall continue to operate as intended. No degradation of performance or loss of function is allowed below a performance level specified by the manufacturer, when the apparatus is used as intended.
Criterion B	The apparatus shall continue to operate as intended after the test. No degradation of performance or loss of function is allowed below a performance level specified by the manufacturer, when the apparatus is used as intended.
Criterion C	Loss of function is allowed, provided the function is self-recoverable, or can be restored by the operation of the controls by the user in accordance with the manufacturer's instructions. A reboot or re-start operation is allowed.

5.3 Electrostatic Discharge Immunity Test

5.3.1 Test Specification

Basic Standard:	IEC 61000-4-2
Discharge Impedance	330Ω / 150pF
Discharge Voltage:	Air Discharge ± 8 kV Contact Discharge ± 4 kV
Polarity:	Positive / Negative
Number of Discharge:	Minimum 10 times at each test point
Discharge Mode:	Single discharge
Discharge Period:	1-second minimum

5.3.2 Test Procedure

The basic test procedure was in accordance with IEC 61000-4-2:

a. Electrostatic discharges were applied only to those points and surfaces of the EUT that are accessible to users during normal operation.

b. The test was performed with at least ten single discharges on the pre-selected points in the most sensitive polarity.

c. The time interval between two successive single discharges was at least 1 second.

d. The ESD generator was held perpendicularly to the surface to which the discharge was applied and the return cable was at least 0.2 meters from the EUT.

e. Contact discharges were applied to the non-insulating coating, with the pointed tip of the generator penetrating the coating and contacting the conducting substrate.

f. Air discharges were applied with the round discharge tip of the discharge electrode approaching the EUT as fast as possible (without causing mechanical damage) to touch the EUT. After each discharge, the ESD generator was removed from the EUT and re-triggered for a new single discharge. The test was repeated until all discharges were completed.

g. At least ten single discharges (in the most sensitive polarity) were applied to the Horizontal Coupling

Plane at points on each side of the EUT. The ESD generator was positioned vertically at a distance of 0.1 meters from the EUT with the discharge electrode touching the HCP.

h. At least ten single discharges (in the most sensitive polarity) were applied to the center of one vertical edge of the Vertical Coupling Plane in sufficiently different positions that the four faces of the EUT were completely illuminated. The VCP (dimensions 0.5m×0.5m) was placed vertically to and 0.1 meters from the EUT.

5.3.3 Test Setup

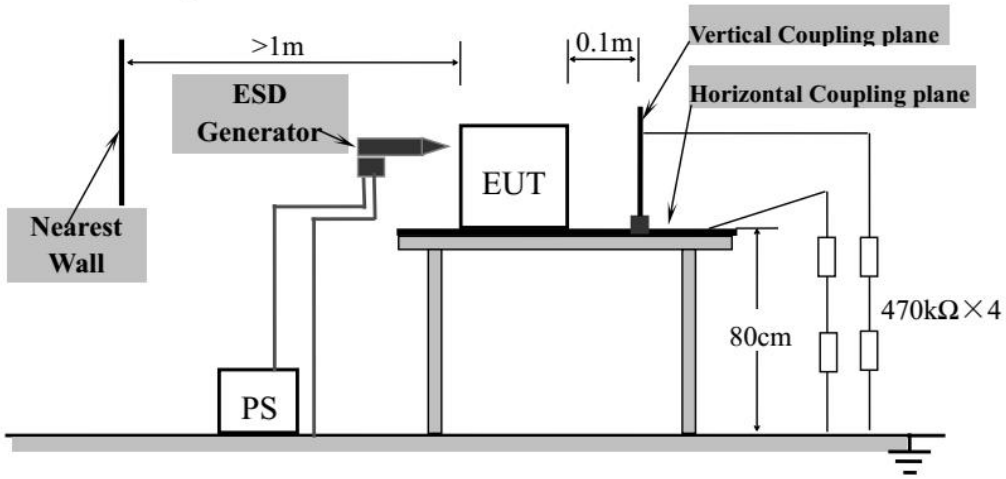

5.3.4 Test Result

Testing Room: Located at C1.

5.3.5 Test Result

Mode 1

Test points	Discharge Mode	Test level(kV)	Discharge frequency	EUT phenomenon	Performance criterion
HCP	Contact	±4kV	Plus and minus 10 times each	Note (1)	A
VCP	Contact	±4kV	Plus and minus 10 times each	Note (1)	A
Metal casing	Contact	±4kV	Plus and minus 10 times each	Note (1)	A
Nut	Contact	±4kV	Plus and minus 10 times each	Note (1)	A
Plastic casing	Air	±4kV	Plus and minus 10 times each	Note (1)	A
Gap	Air	±8kV	Plus and minus 10 times each	Note (1)	A

Note:

1. During the test no loss of performance was observed. After the test the EUT functioned as intended. No unacceptable loss of performance was observed.

5.4 Radiated, Radio Frequency Electromagnetic Field Immunity Test

5.4.1 Test Specification

Basic Standard:	IEC 61000-4-3
Frequency Range:	80 MHz – 1000 MHz 1400-6000 MHz,(Frequency ±1%)
Field Strength:	3 V/m
Modulation:	1kHz sine wave, 80%, AM modulation, Dwell time 3s
Frequency Step:	1% of fundamental
Polarity of Antenna	Horizontal and Vertical
Test Distance:	3m
Antenna Height:	1.55m

5.4.2 Test Procedure

The test procedure was in accordance with IEC 61000-4-3.

a. The testing was performed in a fully anechoic chamber. The transmit antenna was located at a distance of 3 meters from the EUT.

b. The frequency range is swept from 80 MHz to 1000MHz， 1800 MHz, 2600 MHz, 3500 MHz, 5000 MHz(Frequency ±1%) with the signal 80% amplitude modulated with a 1 kHz sine wave. The rate of sweep did not exceed 1.5×10^{-3} decade/s. Where the frequency range is swept incrementally, the step size was 1% of fundamental.

c. The dwell time at each frequency shall be not less than the time necessary for the EUT to be able to respond.

d. The field strength level was 3V/m.

e. The test was performed with the EUT exposed to both vertically and horizontally polarized fields on each of the four sides.

5.4.3 Test Setup

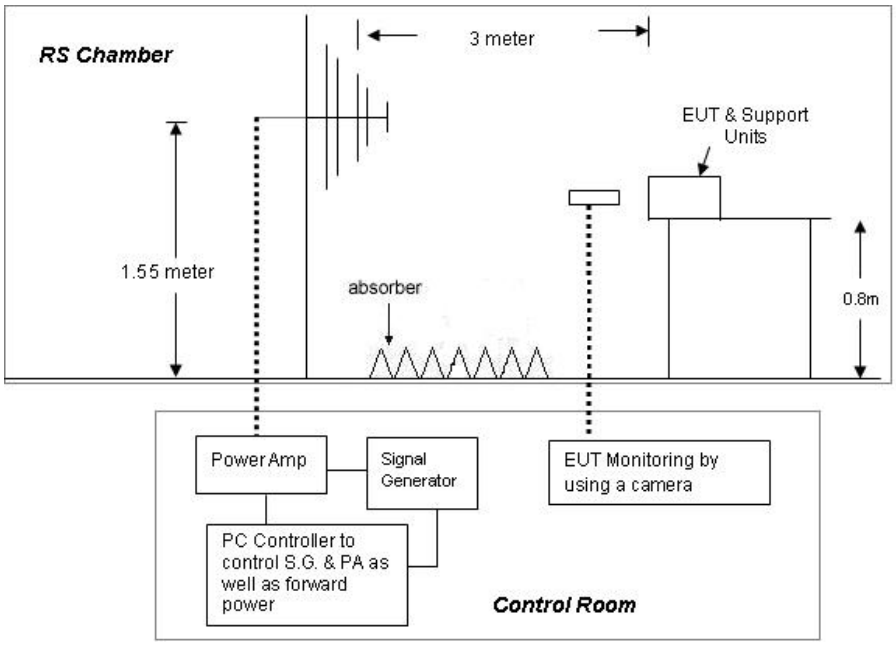

5.4.4 Test Result

Testing Room: Located at SAC 3.

5.4.5 Test Result

Mode 1

Test Frequency Range (MHz)	Test field strength (V/m)	Azimuth	Polarity (H/V)	EUT phenomenon	Performance criterion
80-1000	3	Front	H、V	Note (1)	A
1400-6000	3	Rear	H、V	Note (1)	A

Note:

1. During the test no loss of performance was observed. After the test the EUT functioned as intended. No unacceptable loss of performance was observed.

5.5 Electrical Fast Transient/Burst Immunity Test

5.5.1 Test Specification

Basic Standard:	IEC 61000-4-4
Test Voltage:	/
Polarity:	Positive/Negative
Impulse Frequency:	5kHz
Impulse wave shape:	5/50ns
Burst Duration:	15ms
Burst Period:	300ms
Test Duration:	≥1 min. / polarity

5.5.2 Test Procedure

a. The EUT was tested with 1000 Volt discharges to the AC power input leads.
b. Both positive and negative polarity discharges were applied.
c. The length of the “hot wire” from the coaxial output of the EFT generator to the terminals on the EUT should not exceed 1 meter.
d. The duration time of each test sequential was 1 minute.
e. The transient/burst waveform was in accordance with IEC 61000-4-4, 5/50ns.

5.5.3 Test Setup

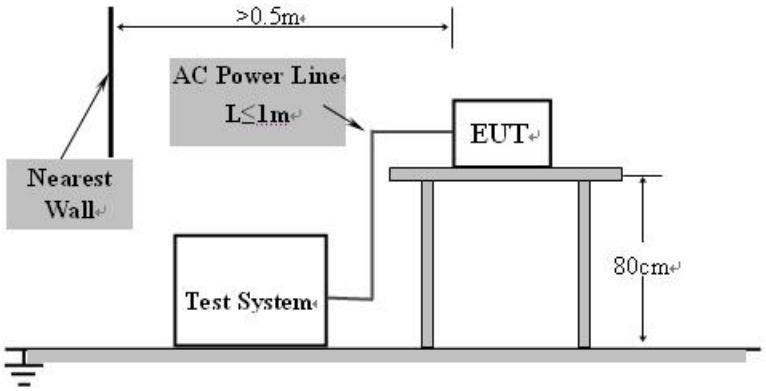

5.5.4 Test Location

Testing Room: Located at C3.

5.5.5 Test Result

The EUT is not suitable for the test.

5.6 Surge Immunity Test

5.6.1 Test Specification

Basic Standard:	IEC 61000-4-5
Waveform:	Voltage 1.2/50 μs; Current 8/20 μs
Test Voltage:	Power port, line to line 1 kV, line to earth 2 kV
Polarity:	Positive/Negative
Phase Angle:	0°,90°,180°,270°
Repetition Rate:	60sec
Times:	5 times/each condition.

5.6.2 Test Procedure

a. The EUT and the auxiliary equipment were placed on a table of 0.8m heights above a metal ground reference plane. The size of ground plane is greater than 1m×1m and project beyond the EUT by at least 0.1m on all sides. The ground plane is connected to the protective earth. The length of power cord between the coupling device and the EUT was less than 2 meters (provided by the manufacturer).

b. The EUT was connected to the power mains through a coupling device that directly couples the surge interference signal. The surge noise was applied synchronized to the voltage phase at the zero crossing and the peak value of the AC voltage wave (positive and negative).

c. The surges were applied line to line and line(s) to earth. When testing line to earth the test voltage was applied successively between each of the lines and earth. Steps up to the test level specified increased the test voltage. All lower levels including the selected test level were tested. The polarity of each surge level included positive and negative test pulses.

d. The number of pulses applied shall be as follows:

- Five positive pulses line-to-neutral at 90° phase
- Five negative pulses line-to-neutral at 270° phase

The following additional pulses are required only if the EUT has an earth connection or if the EUT is earthed via any AE.

- Five positive pulses line-to-earth at 90° phase
- Five negative pulses line-to-earth at 270° phase
- Five negative pulses neutral-to-earth at 90° phase
- Five positive pulses neutral-to-earth at 270° phase

5.6.3 Test Setup

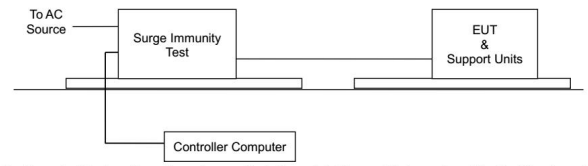

For the actual test configuration, please refer to the related item – Photographs of the Test Configuration.

5.6.4 Test Location

Testing Room: Located at C3.

5.6.5 Test Result

The EUT is not suitable for the test.

5.7 Immunity to Conducted Disturbances Induced by RF Fields

5.7.1 Test Specification

Basic Standard:	IEC 61000-4-6
Frequency Range:	0.15 MHz – 80 MHz
Field Strength:	3 Vms
Modulation:	1 kHz Sine Wave, 80%, AM Modulation, Dwell time 3s
Frequency Step:	1% of fundamental
Coupled Cable:	a.c. power line

5.7.2 Test Procedure

a. The EUT shall be tested within its intended operating and climatic conditions.

b. The test shall be performed with the test generator connected to each of the coupling and decoupling devices in turn, while the other non-excited RF input ports of the coupling devices are terminated by a 50-ohm load resistor.

c. The frequency range is swept from 150 kHz to 80 MHz, using the signal level established during the setting process and with a disturbance signal of 80% amplitude. The signal is modulated with a 1 kHz sine wave, pausing to adjust the RF signal level or the switch coupling devices as necessary. The sweep rate shall not exceed 1.5×10^{-3} decades/s. The step size shall not exceed 1% of the start and thereafter 1% of the preceding frequency value where the frequency is swept incrementally.

d. The dwell time at each frequency shall not be less than the time necessary for the EUT to be exercised, and able to respond. Sensitive frequencies such as clock frequencies and harmonics or frequencies of dominant interest, shall be analyzed separately.

e. Attempts should be made to fully exercise the EUT during test, and to fully interrogate all exercise modes selected for susceptibility.

5.7.3 Test Setup

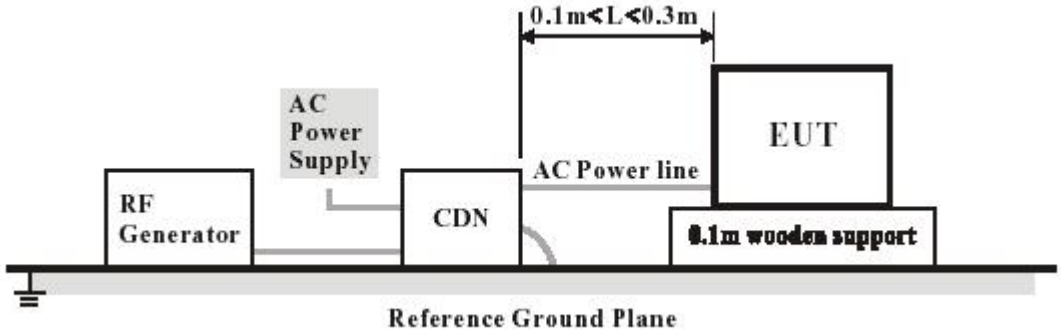

5.7.4 Test Location

Testing Room: Located at C4.

5.7.5 Test Result

The EUT is not suitable for the test.

5.8 Power Frequency Magnetic Field Immunity Test

5.8.1 Test Specification

Basic Standard:	IEC 61000-4-8
Frequency Range:	50 Hz or 60 Hz
Field Strength:	3 A/m
Observation Time:	1 minute
Inductance Coil:	Rectangular type, 1m×1m

5.8.2 Test Procedure

a. The equipment is configured and connected to satisfy its functional requirements. It shall be placed on the GRP with the interposition of a 0.1m thick insulating support.

b. The equipment cabinets shall be connected to the safety earth directly on the GRP via the earth terminal of the EUT.

c. The power supply, input and output circuits shall be connected to the sources of power supply, control and signal.

d. The cables supplied or recommended by the equipment manufacturer shall be used. 1 meter of all cables used shall be exposed to the magnetic field.

5.8.3 Test Setup

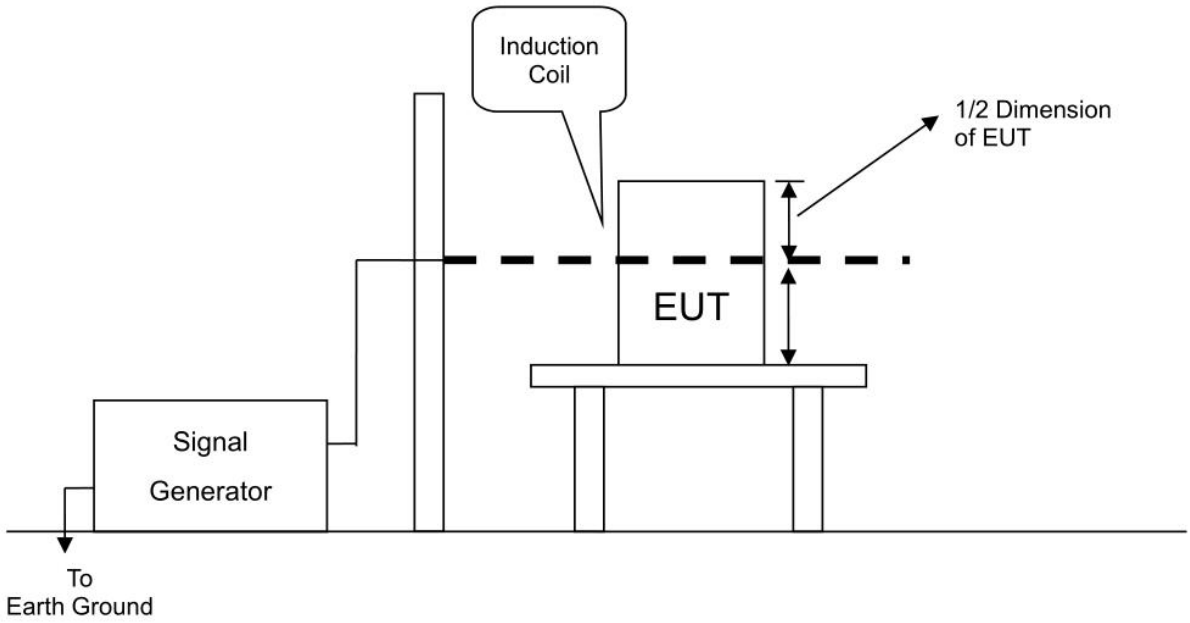

For the actual test configuration, please refer to the related item – Photographs of the Test Configuration.

5.8.4 Test Location

Testing Room: Located at C3.

5.8.5 Test Result

Mode 1

Direction	Frequency (Hz)	Field Strength (A/m)	Time of duration	EUT phenomenon	Performance criterion
X	50	3	60s	Note (1)	A
Y	50	3	60s	Note (1)	A
Z	50	3	60s	Note (1)	A

Note:

1. During the test no loss of performance was observed. After the test the EUT functioned as intended. No unacceptable loss of performance was observed.

5.9 Voltage Dips and Short Interruptions Immunity Test

5.9.1 Test Specification

Basic Standard:	IEC 61000-4-11	
Voltage Dips:	50 Hz	100% reduction, 0.5 period 30% reduction, 25 periods
	60 Hz	100% reduction, 0.5 period 30% reduction, 30 periods
Voltage Interruptions:	50 Hz	100% reduction, 250 periods
	60 Hz	100% reduction, 300 periods
Voltage Phase Angle:	0°	
Test cycle:	3 times	

5.9.2 Test Procedure

a. The power cord was used as supplied by the manufacturer. The EUT was connected to the line output of the Voltage Dips and Interruption Generator.

b. The EUT was tested for (I) 95% voltage dip of supplied voltage with duration of 10ms, (II)30% voltage dip of supplied voltage and duration 500ms. Both of the dip tests were carried out for a sequence of three voltage dips with intervals of 10 seconds.

c. 95% voltage interruption of supplied voltage with duration of 5000ms was followed, which was a sequence of three voltage interruptions with intervals of 10 seconds.

d. Changes to occur at 0 degree crossover point of the voltage waveform. If the EUT does not demonstrate compliance when tested with 0 degree switching, the test shall be repeated with the switching occurring at both 90 degrees and 270 degrees. If the EUT satisfies these alternative requirements, then it fulfils the requirements. This condition shall be recorded in the test report.

e. Where the equipment has a rated voltage range the following shall apply:
If the voltage range does not exceed 20 % of the lower voltage specified for the rated voltage range. A single voltage within that range may be selected for testing.
In all other cases, the test procedure shall be applied for both the lowest and highest voltages declared in the voltage range.

5.9.3 Test Setup

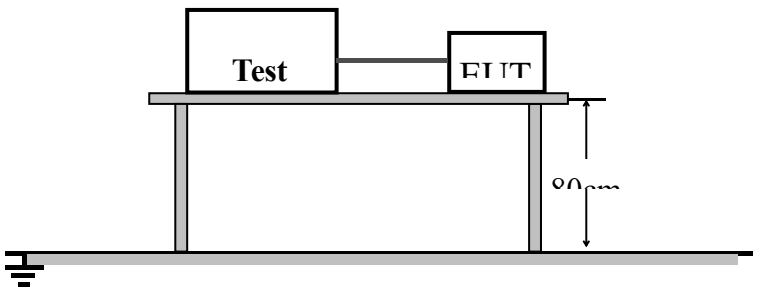

5.9.4 Test Location

Testing Room: Located at C3.

5.9.3 Test Result

The EUT is not suitable for the test.

ANNEX I - EUT PHOTOS

EUT PHOTOS (1)

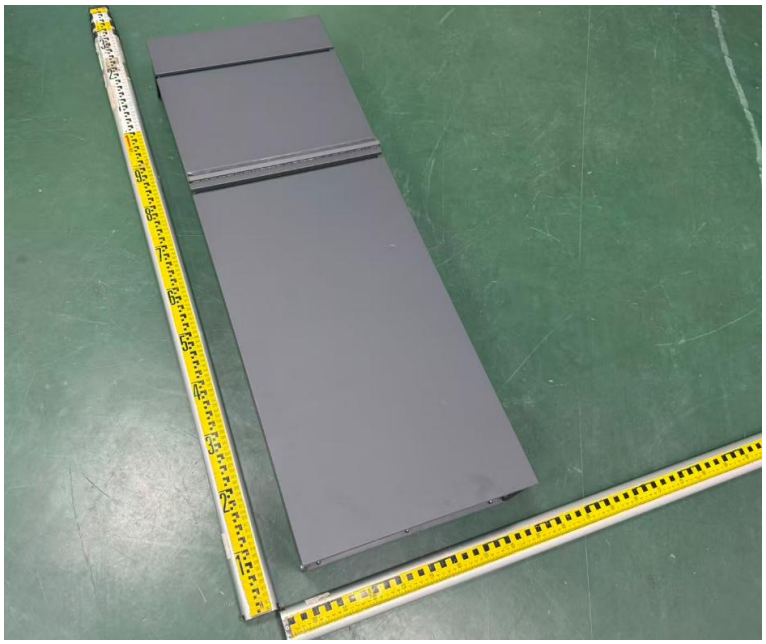

EUT PHOTOS (2)

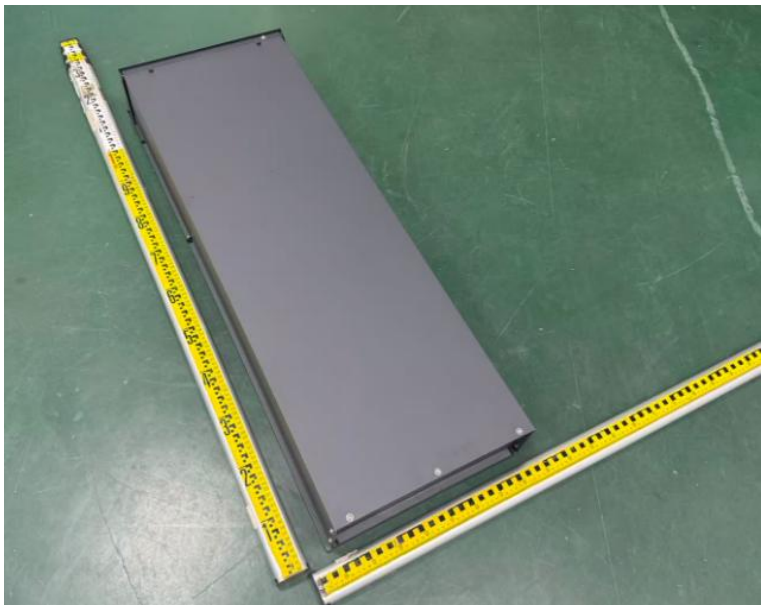

Name Plate

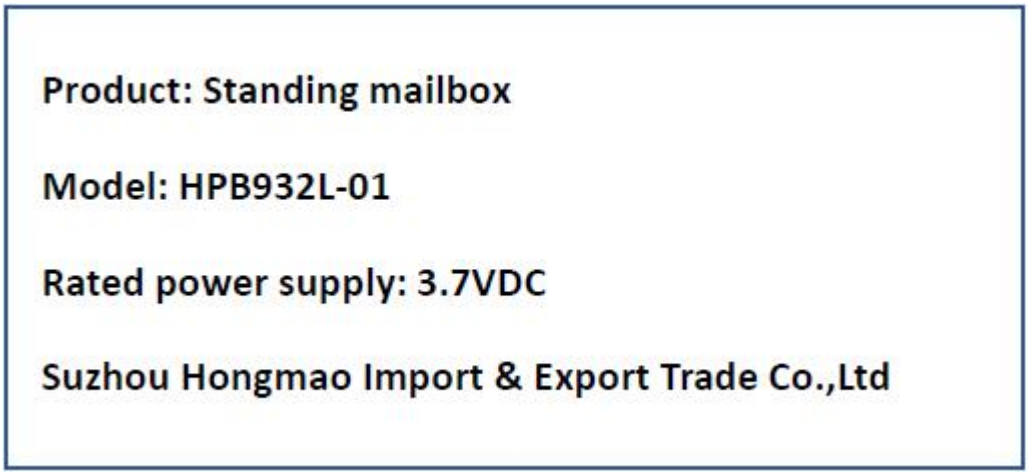

End of the report